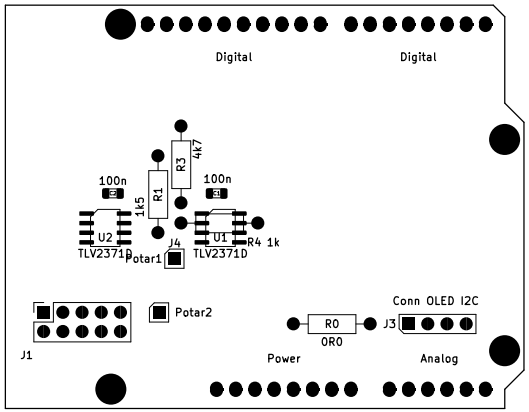

LAAS CNRS F.BLANC

Sheet:
File: Arduino_Uno.kicad_pcb

Title: TEC OLED

Size: A4	Date: 2020-02-17	Rev: 1.0 initial
KiCad E.D.A. kicad (5.1.5)-3		Id: 1/1